a FREE Download from the Archives of AnalogRules.com

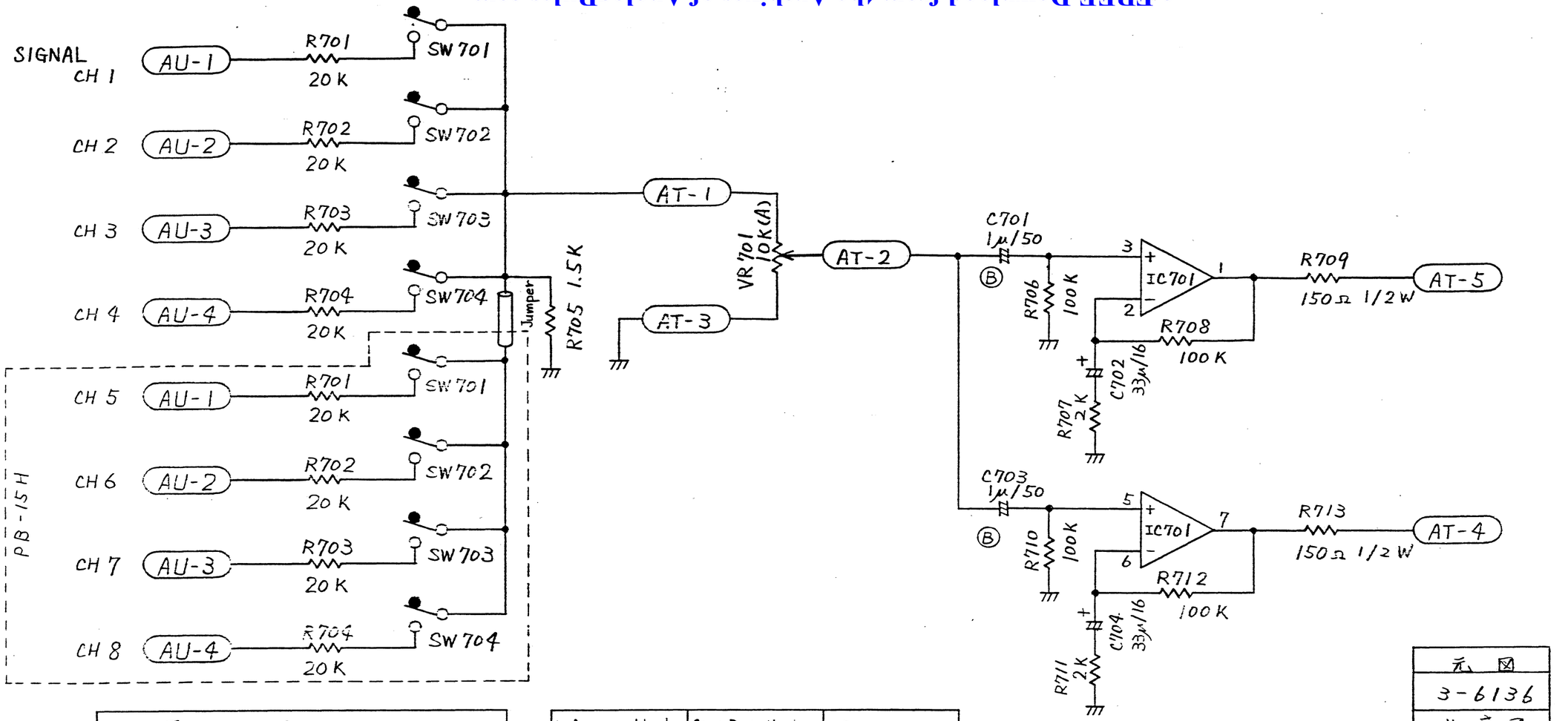

Function of Switches		
Ref. Number	Function	Position
SW 701	Monitor SW ①⑤	Normal (OFF)
SW 702	Monitor SW ②⑥	Normal (OFF)
SW 703	Monitor SW ③⑦	Normal (OFF)
SW 704	Monitor SW ④⑧	Normal (OFF)
Function of Potentiometer		
VR 701	Head Phone Output Level	

Reference Number		Otari Part Number	Description
IC	701	I-0009	NJM4556DE

元図
3-6136
生産図
3-6393
取説図
3-6394

TYPE NO(A)TO
( )AT THE END

NOTES : UNLESS OTHERWISE SPECIFIED
1. RESISTANCE VALUES ARE IN OHMS, ¼W, 5%.
2. CAPACITANCE VALUES ARE IN FARADS, 50V.
3. CAPACITOR SYMBOL MARKS ARE AS FOLLOWS.
   - ALUMINUM ELECTROLYTIC CAPACITOR.
   - Ⓑ : BIPOLAR ALUMINUM ELECTROLYTIC CAPACITOR.
   - Ⓕ : MYLAR FILM CAPACITOR (±5%, 50V)
   - Ⓢ : POLYSTYRENE FILM CAPACITOR (±5%, 50V)
   - Ⓒ : CERAMIC CAPACITOR.
   - Ⓜ : MICA CAPACITOR (±5%)
   - Ⓣ : TANTALUM ELECTROLYTIC CAPACITOR.
   - Ⓟ : POLYPROPYLENE FILM CAPACITOR (±5%)
   - Ⓛ : LOW LEAKAGE CURRENT ELECTROLYTIC CAPACITOR.
   - Ⓜ : METALLIZED PAPER CAPACITOR (±10%)
   - SPARK KILLER.
4. ⚠ : SAFETY COMPONENT ; REPLACE ONLY WITH THE SPECIFIED COMPONENT FOR SAFETY REASON.

MRK	REV. No.	DATE	DWN	APP
7				
6				
5				
4				
3				
2				
1				

DRAWN	アキモト	80.12.11
DESIGNED	アキモト	80.7.14
CHECKED	[illegible]	80.12.11
APPROVED	[illegible]	[illegible]

OTARI Otari Electric Co.,Ltd.

NAME HEAD PHONE PCB Assy

PART No. PB15C0A

DWG No. 3-..6136

MODEL MX5050MKIII-8

DWG. No. 3..6394

a FREE Download from the Archives of AnalogRules.com

a FREE Download from the Archives of AnalogRules.com

部番 | 図番 | 品番 | 品名 | 定格 | 個数 | 備考

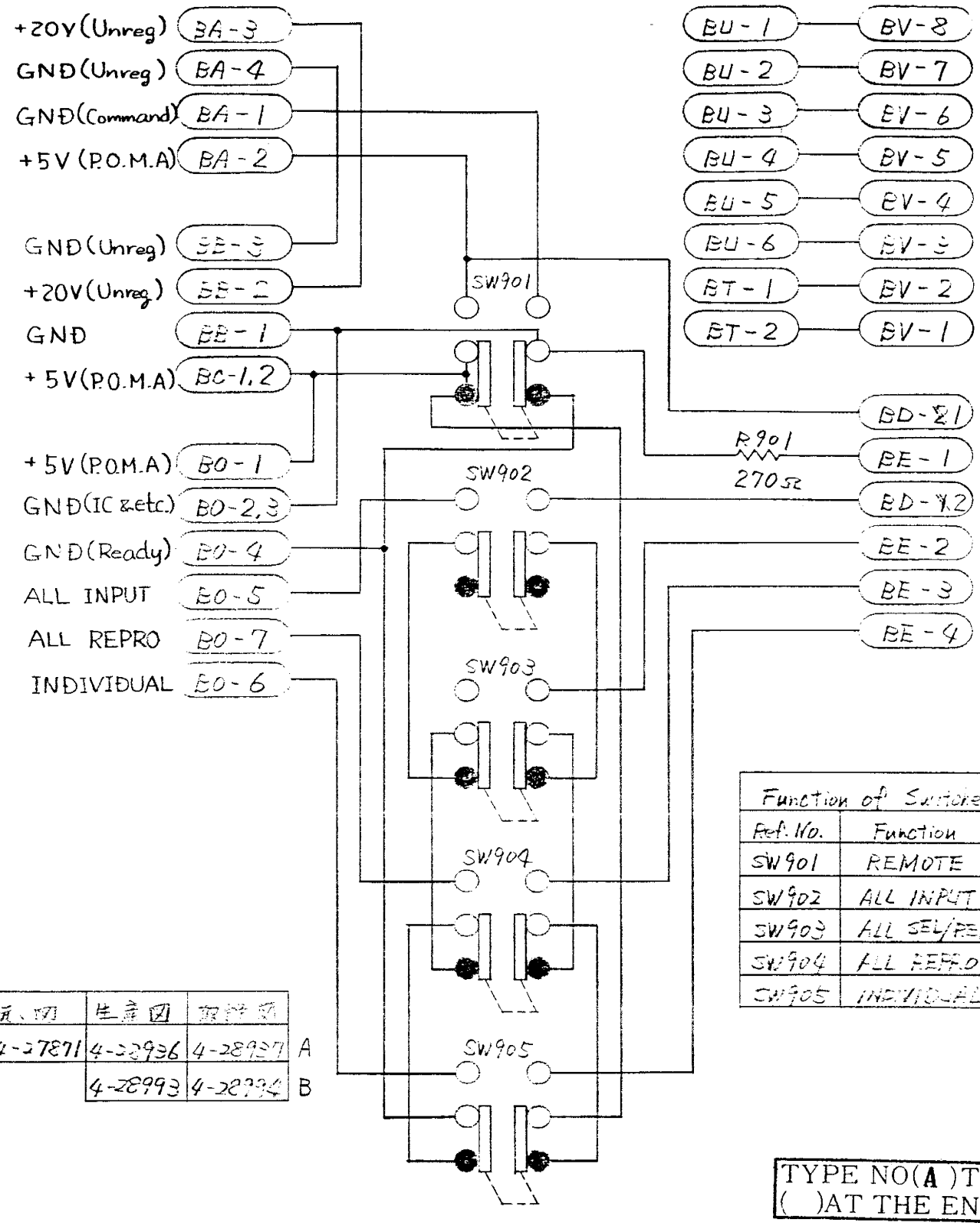

Function of Switches	
Ref. No.	Function
SW901	REMOTE
SW902	ALL INPUT
SW903	ALL SEL/REP
SW904	ALL REPRO
SW905	INDIVIDUAL

元、図	生産図	取付図	
4-27871	4-28936	4-28937	A
	4-28993	4-28994	B

TYPE NO(A)TO ( )AT THE END

5					材料		OTARI 小谷電機株式会社	
4								
3					仕上	指定以外のエッジはイトメのこと	形式	PB-45J
2								
1					処理		品名	MODE SELECT PCB Assy
記号	改訂番号	年月日	担当	承認	普通寸法差	OS JIS 一級	図名	CIRCUIT DIAGRAM.
承認	ゴンダ 81.5.25	検図 イシイ 81.5.9	設計	マキモト 80.11.10	製図	マキモト 81.5.9	尺度	第三角法 単位 mm
							品番	PB45JoA

適用 MX5050MKII-8

図番 4.28994

a FREE Download from the Archives of AnalogRules.com

a FREE Download from the Archives of AnalogRules.com

部番	図番	品番	品名・定格	個数	備考

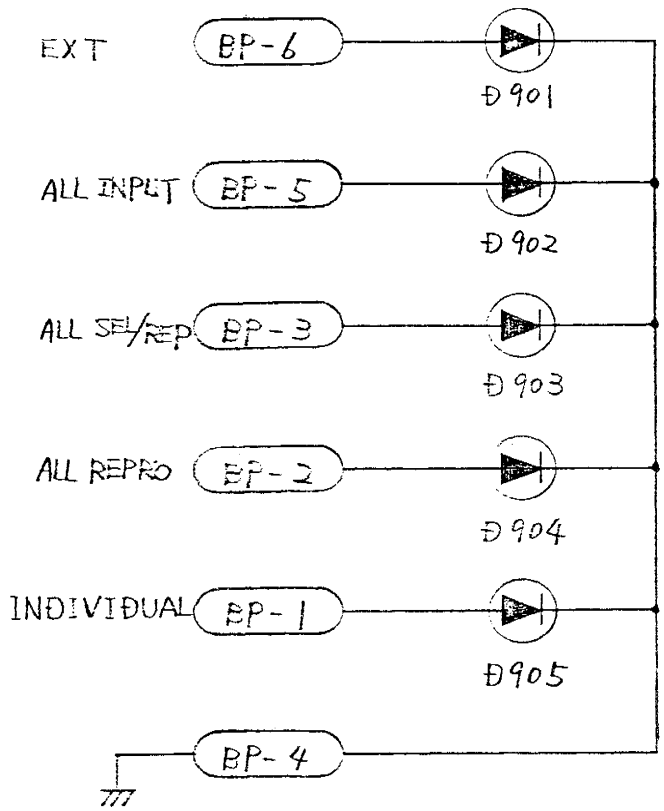

元図	生産図	取説図	TYPE
4-27874	4-29001	4-29002	

TYPE NO(A)TO
( )AT THE END

5					材料		DTAR 小谷電機株式会社		
4					仕上	指定以外のエッジはイトメのこと	形式	PB-76K	
3					処理		品名	LED PCB Assy	
2					普通寸法差	OS	JIS 一級	図名	CIRCUIT DIAGRAM
1								品番	PB76KoA
記号	改訂番号	年月日	担当	承認					

承認	検図	設計	製図	尺度	第三角法
	80.11.17	80.11.17			単位 mm

使用 MX5500MK2/8

図番 4-29002

a FREE Download from the Archives of AnalogRules.com

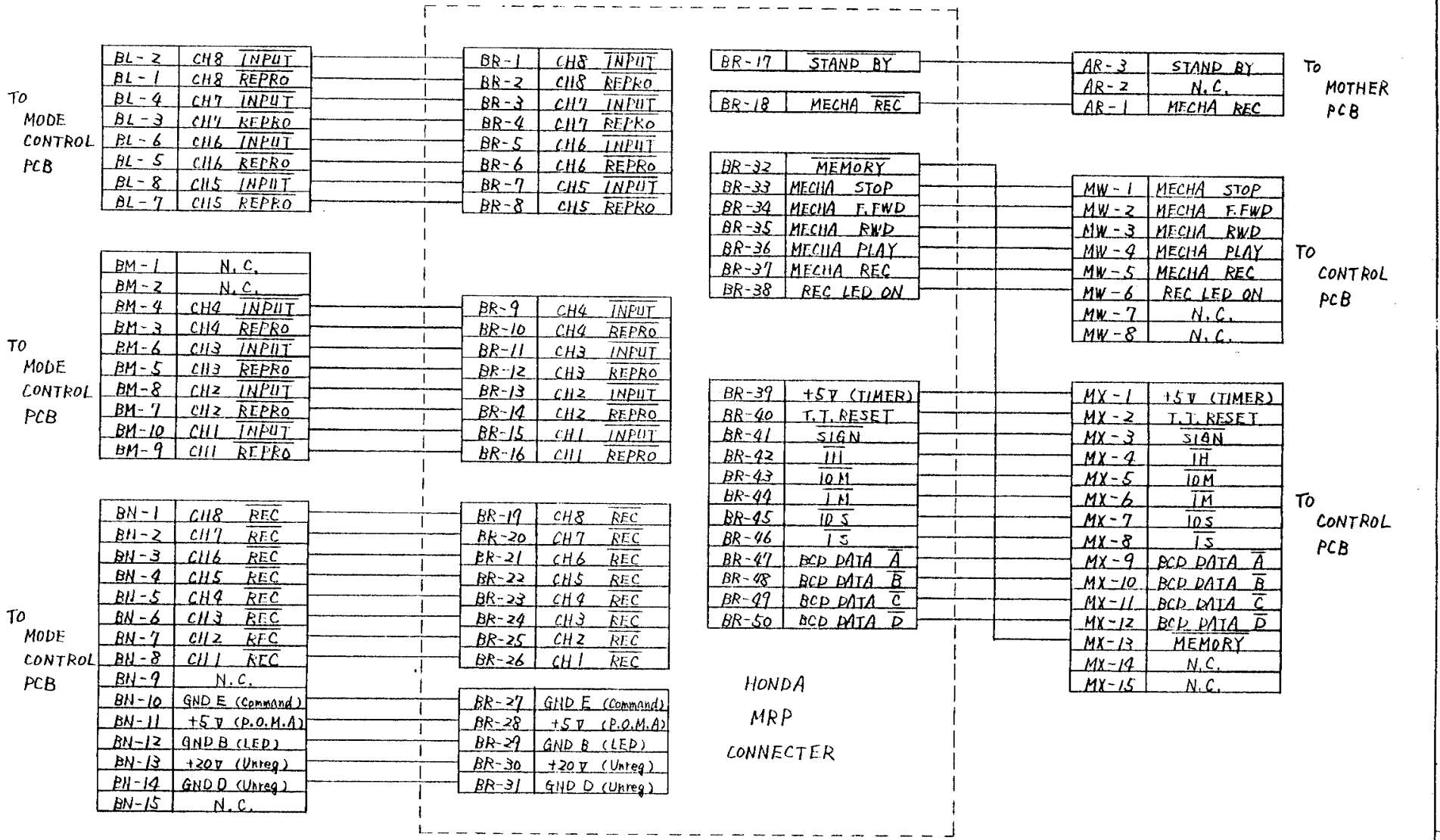

TYPE NO(A)TO ( )AT THE END

元図	生産図	取説図
3-6395	4-28938	4-28939

記号	改訂番号	年月日	担当	承認
6				
5				
4				
3				
2				
1				

材料
仕上　指定以外のエッジはイトメのこと
処理
普通寸法差　OS　JIS　—　級

承認	検図	設計	製図	尺度
	81.5.22	80.11.17	81.9.22	

第三角法
単位 mm

ATARI 小谷電機株式会社

形式	ZA-62T
品名	CABLE Ass'y A
図名	WIRING DIAGRAM
品番	ZA62T0B-

1頁 / 1葉中

02 37 4 11 2,500

4 28939

a FREE Download from the Archives of AnalogRules.com
a FREE Download from the Archives of AnalogRules.com

a FREE Download from the Archives of AnalogRules.com

CB-110 REMOTE CONTROL UNIT OPERATION MANUAL

(1) GENERAL

The OTARI CB-110 Remote Control Unit is designed specifically for the MX-5050 MKIII-8.

The CB-110 takes over full function (Transport Control; Memory Function; Tape timer; Audio electrics control) of MX-5050 MKIII-8.

(2) CONNECTION

Connect the connector of the CB-110 to the connector of MX-5050 MKIII-8 located on the rear panel.

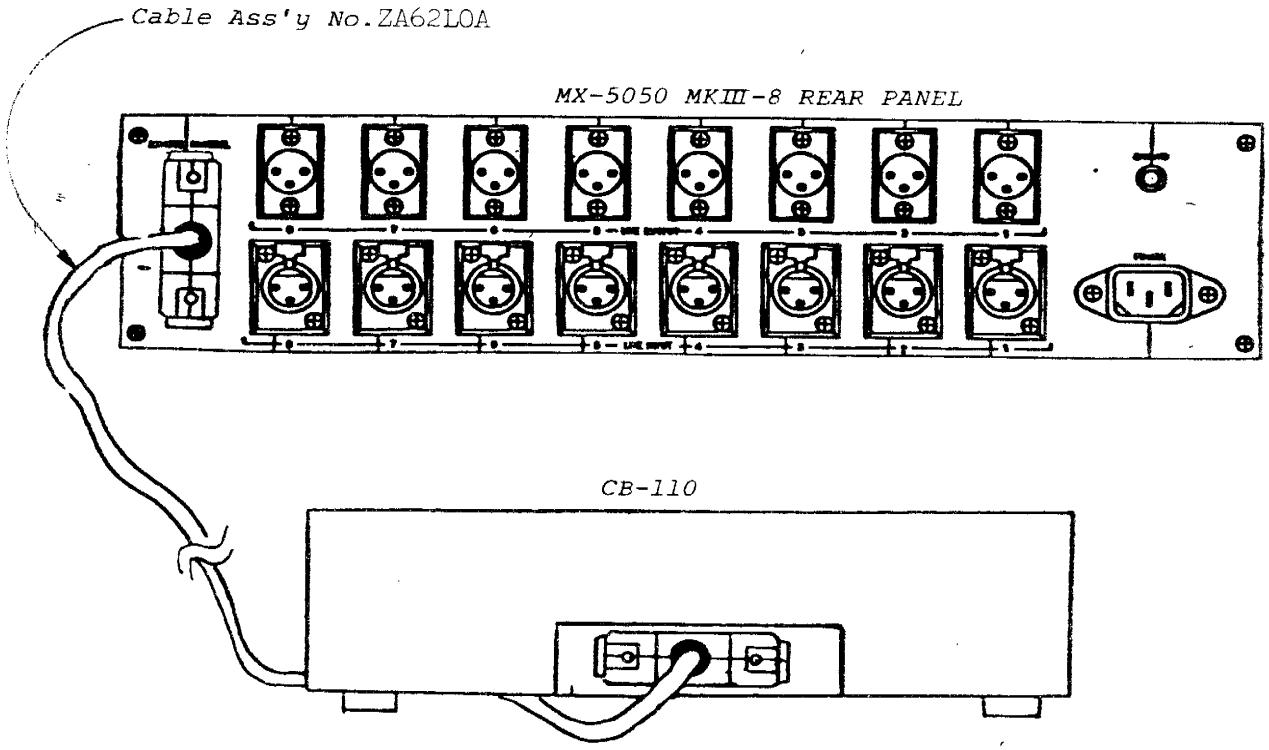

Fig 1 CONNECTION

a FREE Download from the Archives of AnalogRules.com

a FREE Download from the Archives of AnalogRules.com

(3) OPERATION

(3)-1 CONTROLS and INDICATORS

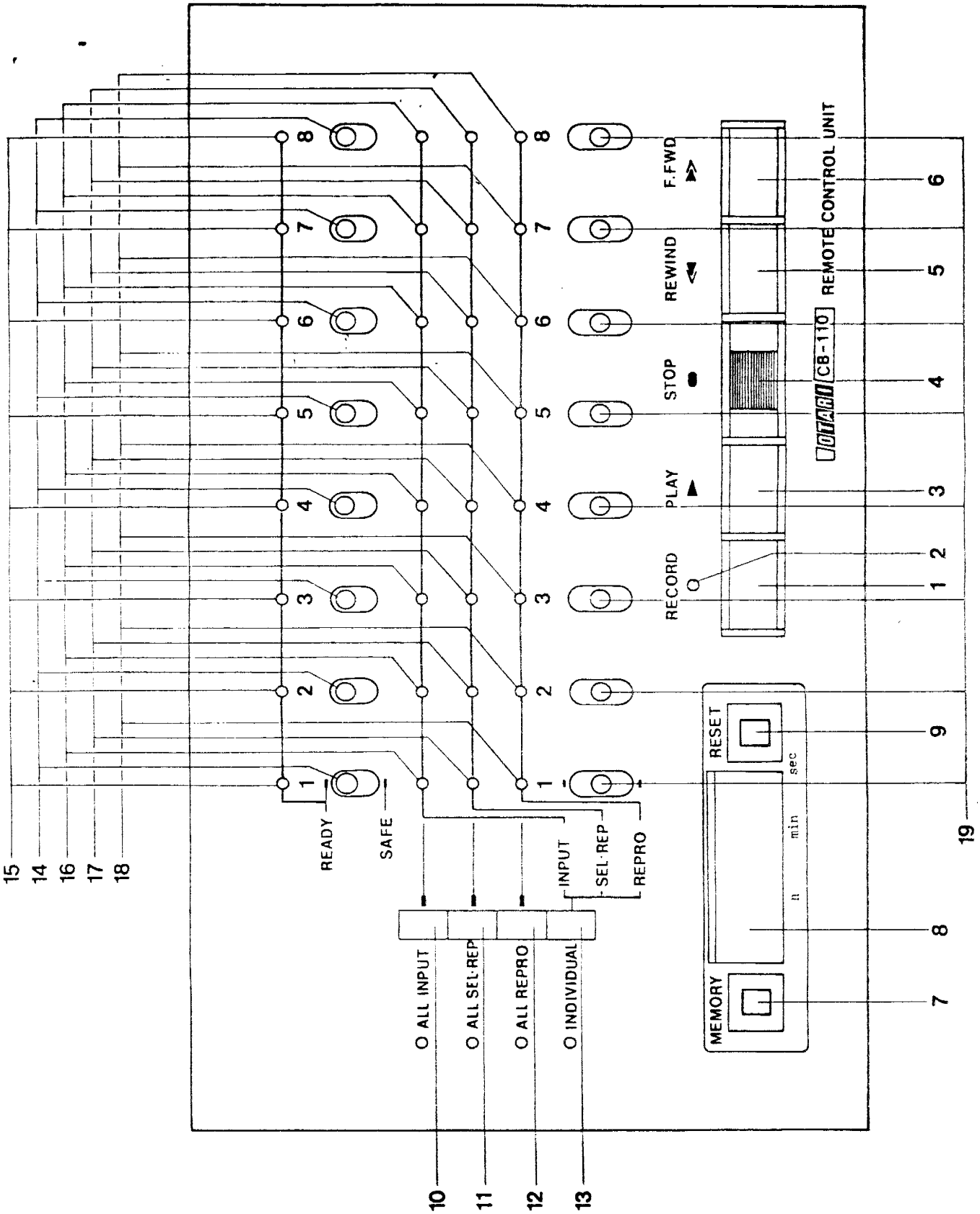

Fig 2 CONTROLS and INDICATORS

a FREE Download from the Archives of AnalogRules.com

a FREE Download from the Archives of AnalogRules.com

Index No.	Name	Function
1	RECORD pushbutton switch	Used in conjunction with the PLAY pushbutton and the READY/SAFE toggle switches on the front panel. Selecting READY position on desired channel, simultaneous pressing of PLAY and RECORD pushbuttons initiates RECORD mode. In the PLAY mode, when the RECORD pushbutton is pushed, the MX-5050 MKIII-8 into the RECORD mode. (This is called "Punch in".) In the RECORD mode, when the PLAY pushbutton is depressed, the MX-5050 MKIII-8 enters into the PLAY mode. (This is called "Punch out".) "Punch in" and "Punch out" are used for overdubbing in conjunction with the SEL/REP function.
2	RECORD indicator (red)	Indicates the RECORD mode.

Transport	Amplifier	Transport RECORD indicator * 1	Amplifier RECORD indicator * 2	Recording
non RECORD mode	SAFE	dark	dark	x
non RECORD mode	READY	blink	blink	x ready
RECORD mode	SAFE	lights	dark	x
RECORD mode	READY	lights	lights	o

3	PLAY pushbutton switch	Blinking indicators means that the amplifier is in the RECORD-READY mode. Recording is being carried out only when the amplifier and transport RECORD indicators remain lit. * 1 indicator Index No. 2 * 2 indicator Index No. 15 Used to select the PLAY mode, or used in conjunction with the RECORD pushbutton to perform "Punch in" and "Punch out".

a FREE Download from the Archives of AnalogRules.com

a FREE Download from the Archives of AnalogRules.com

		Pressing the PLAY pushbutton during the F.FWD or REWIND mode stops the tape motion, then automatically starts the PLAY mode.
4	STOP pushbutton switch	Used to stop the tape transport, cancelling the existing mode of operation.
5	REWIND pushbutton switch	Used to select the REWIND mode to run the tape from right to left at high speed. This mode may be entered from any other mode except the EDIT mode.
6	F.FWD (FAST FORWARD) pushbutton switch	Used to select the F.FWD mode to run the tape from left to right at high speed. This mode may be entered from any other mode except the EDIT mode.
7	MEMORY pushbutton switch	Used to search "00.00.00" position on the tape. This mode may be entered any other mode except the EDIT mode.
8	TAPE TIMER (7-segment LED)	A 6-digit TIMER used to locate or log program material on the tape.
9	RESET pushbutton switch	Used to reset the figure of the TAPE TIMER to "00.00.00".
10	ALL INPUT pushbutton switch and indicator (yellow)	Pressing the pushbutton, the adjacent indicator lights, all the INPUT indicators lights, and the input signals are fed to the LINE OUTPUT connectors, the PHONES jack, the VU meters, and the PEAK indicators of all channels.
11	ALL SEL/REP (SELECTIVE REPRODUCTION) pushbutton switch and indicator (green)	Pressing the pushbutton, the adjacent indicator lights, all the SEL/REP indicators lights, and the programs via the record head are fed to the LINE OUTPUT connectors, the PHONES jack, the VU meters, and the PEAK indicators of all channels. Entering the RECORD mode, the monitor program on READY (Index No.14 in this table) selected

a FREE Download from the Archives of AnalogRules.com

a FREE Download from the Archives of AnalogRules.com

		channels are automatically switched from SEL/REP to INPUT. This function is for "Punch in" and "Punch out".
12	ALL REPROduce pushbutton switch and indicator (orange)	Pressing the pushbutton, the adjacent indicator lights, all the REPRO indicators lights, and the programs via the reproduce head are fed to the LINE OUTPUT connectors, the PHONES jack, the VU meters, and the PEAK indicators of all channels.
13	INDIVIDUAL pushbutton switch and indicator (green)	In the depressed position, the adjacent indicator lights, and INPUT or SEL/REP or REPRO mode can be selected with the Monitor Select toggle switches (Index No.19 in this table) at the individual channels.
14	READY/SAFE toggle switches	Used to select channels for recording in conjunction with the PLAY and RECORD pushbuttons. Selecting the READY position, the RECORD indicators illuminate or blink and the RECORD mode of associated channels may be entered or ready. Selecting the SAFE position, the RECORD indicators turn off and activation of associated channels RECORD mode are cancelled. (Index Nos.1, 2, 3 in this table.)
15	RECORD indicators (red)	Indicate activation of associated channel RECORD mode. (Index Nos.2, 14 in this table.)
16	INPUT indicators (yellow)	Indicate activation of associated channel INPUT mode. (Index Nos.10, 13 in this table.)
17	SEL/REP indicators (green)	Indicate activation of associated channel SEL/REP mode. (Index Nos.11, 13 in this table.)
18	REPROduce indicators (orange)	Indicate activation of associated channel REPRO mode. (Index Nos.12, 13 in this table.)
19	Monitor Select toggle switches	Used to select the monitor program. (LINE OUTPUT signal Index No.13)

a FREE Download from the Archives of AnalogRules.com

a FREE Download from the Archives of AnalogRules.com

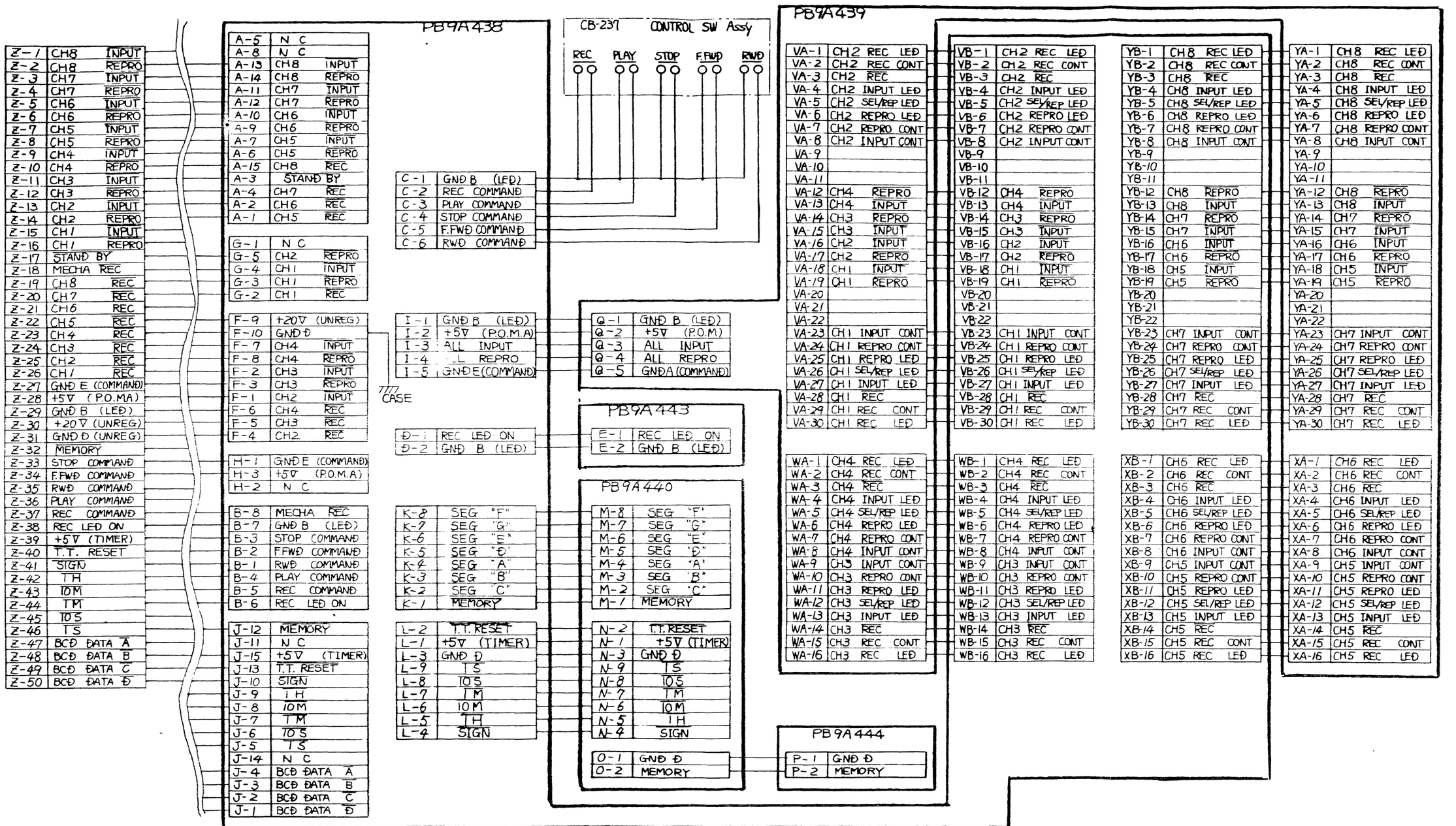

Z-1	CH8 INPUT
Z-2	CH8 REPRO
Z-3	CH7 INPUT
Z-4	CH7 REPRO
Z-5	CH6 INPUT
Z-6	CH6 REPRO
Z-7	CH5 INPUT
Z-8	CH5 REPRO
Z-9	CH4 INPUT
Z-10	CH4 REPRO
Z-11	CH3 INPUT
Z-12	CH3 REPRO
Z-13	CH2 INPUT
Z-14	CH2 REPRO
Z-15	CH1 INPUT
Z-16	CH1 REPRO
Z-17	STAND BY
Z-18	MECHA REC
Z-19	CH8 REC
Z-20	CH7 REC
Z-21	CH6 REC
Z-22	CH5 REC
Z-23	CH4 REC
Z-24	CH3 REC
Z-25	CH2 REC
Z-26	CH1 REC
Z-27	GND E (COMMAND)
Z-28	+5V (P.O.MA)
Z-29	GND B (LED)
Z-30	+20V (UNREG)
Z-31	GND Ð (UNREG)
Z-32	MEMORY
Z-33	STOP COMMAND
Z-34	F.FWD COMMAND
Z-35	RWD COMMAND
Z-36	PLAY COMMAND
Z-37	REC COMMAND
Z-38	REC LED ON
Z-39	+5V (TIMER)
Z-40	T.T. RESET
Z-41	SIGN
Z-42	TH
Z-43	10M
Z-44	TM
Z-45	10S
Z-46	TS
Z-47	BCD DATA A
Z-48	BCD DATA B
Z-49	BCD DATA C
Z-50	BCD DATA Ð

A-5	N C
A-8	N C
A-13	CH8 INPUT
A-14	CH8 REPRO
A-11	CH7 INPUT
A-12	CH7 REPRO
A-10	CH6 INPUT
A-9	CH6 REPRO
A-7	CH5 INPUT
A-6	CH5 REPRO
A-15	CH8 REC
A-3	STAND BY
A-4	CH7 REC
A-2	CH6 REC
A-1	CH5 REC

G-1	N C
G-5	CH2 REPRO
G-4	CH1 INPUT
G-3	CH1 REPRO
G-2	CH1 REC

F-9	+20V (UNREG)
F-10	GND Ð
F-7	CH4 INPUT
F-8	CH4 REPRO
F-2	CH3 INPUT
F-3	CH3 REPRO
F-1	CH2 INPUT
F-6	CH4 REC
F-5	CH3 REC
F-4	CH2 REC

H-1	GND E (COMMAND)
H-3	+5V (P.O.M.A)
H-2	N C

B-8	MECHA REC
B-7	GND B (LED)
B-3	STOP COMMAND
B-2	F.FWD COMMAND
B-1	RWD COMMAND
B-4	PLAY COMMAND
B-5	REC COMMAND
B-6	REC LED ON

J-12	MEMORY
J-11	N C
J-15	+5V (TIMER)
J-13	T.T. RESET
J-10	SIGN
J-9	TH
J-8	10M
J-7	TM
J-6	10S
J-5	TS
J-14	N C
J-4	BCD DATA A
J-3	BCD DATA B
J-2	BCD DATA C
J-1	BCD DATA Ð

C-1	GND B (LED)
C-2	REC COMMAND
C-3	PLAY COMMAND
C-4	STOP COMMAND
C-5	F.FWD COMMAND
C-6	RWD COMMAND

I-1	GND B (LED)
I-2	+5V (P.O.M.A)
I-3	ALL INPUT
I-4	ALL REPRO
I-5	GND E (COMMAND)

Ð-1	REC LED ON
Ð-2	GND B (LED)

K-8	SEG "F"
K-7	SEG "G"
K-6	SEG "E"
K-5	SEG "Ð"
K-4	SEG "A"
K-3	SEG "B"
K-2	SEG "C"
K-1	MEMORY

L-2	T.T. RESET
L-1	+5V (TIMER)
L-3	GND Ð
L-9	TS
L-8	10S
L-7	TM
L-6	10M
L-5	TH
L-4	SIGN

Q-1	GND B (LED)
Q-2	+5V (P.O.M)
Q-3	ALL INPUT
Q-4	ALL REPRO
Q-5	GND A (COMMAND)

E-1	REC LED ON
E-2	GND B (LED)

M-8	SEG "F"
M-7	SEG "G"
M-6	SEG "E"
M-5	SEG "Ð"
M-4	SEG "A"
M-3	SEG "B"
M-2	SEG "C"
M-1	MEMORY

N-2	T.T. RESET
N-1	+5V (TIMER)
N-3	GND Ð
N-9	TS
N-8	10S
N-7	TM
N-6	10M
N-5	TH
N-4	SIGN

O-1	GND Ð
O-2	MEMORY

P-1	GND Ð
P-2	MEMORY

VA-1	CH2 REC LED
VA-2	CH2 REC CONT
VA-3	CH2 REC
VA-4	CH2 INPUT LED
VA-5	CH2 SEL/REP LED
VA-6	CH2 REPRO LED
VA-7	CH2 REPRO CONT
VA-8	CH2 INPUT CONT
VA-9	
VA-10	
VA-11	
VA-12	CH4 REPRO
VA-13	CH4 INPUT
VA-14	CH3 REPRO
VA-15	CH3 INPUT
VA-16	CH2 INPUT
VA-17	CH2 REPRO
VA-18	CH1 INPUT
VA-19	CH1 REPRO
VA-20	
VA-21	
VA-22	
VA-23	CH1 INPUT CONT
VA-24	CH1 REPRO CONT
VA-25	CH1 REPRO LED
VA-26	CH1 SEL/REP LED
VA-27	CH1 INPUT LED
VA-28	CH1 REC
VA-29	CH1 REC CONT
VA-30	CH1 REC LED

VB-1	CH2 REC LED
VB-2	CH2 REC CONT
VB-3	CH2 REC
VB-4	CH2 INPUT LED
VB-5	CH2 SEL/REP LED
VB-6	CH2 REPRO LED
VB-7	CH2 REPRO CONT
VB-8	CH2 INPUT CONT
VB-9	
VB-10	
VB-11	
VB-12	CH4 REPRO
VB-13	CH4 INPUT
VB-14	CH3 REPRO
VB-15	CH3 INPUT
VB-16	CH2 INPUT
VB-17	CH2 REPRO
VB-18	CH1 INPUT
VB-19	CH1 REPRO
VB-20	
VB-21	
VB-22	
VB-23	CH1 INPUT CONT
VB-24	CH1 REPRO CONT
VB-25	CH1 REPRO LED
VB-26	CH1 SEL/REP LED
VB-27	CH1 INPUT LED
VB-28	CH1 REC
VB-29	CH1 REC CONT
VB-30	CH1 REC LED

WA-1	CH4 REC LED
WA-2	CH4 REC CONT
WA-3	CH4 REC
WA-4	CH4 INPUT LED
WA-5	CH4 SEL/REP LED
WA-6	CH4 REPRO LED
WA-7	CH4 REPRO CONT
WA-8	CH4 INPUT CONT
WA-9	CH3 INPUT CONT
WA-10	CH3 REPRO CONT
WA-11	CH3 REPRO LED
WA-12	CH3 SEL/REP LED
WA-13	CH3 INPUT LED
WA-14	CH3 REC
WA-15	CH3 REC CONT
WA-16	CH3 REC LED

WB-1	CH4 REC LED
WB-2	CH4 REC CONT
WB-3	CH4 REC
WB-4	CH4 INPUT LED
WB-5	CH4 SEL/REP LED
WB-6	CH4 REPRO LED
WB-7	CH4 REPRO CONT
WB-8	CH4 INPUT CONT
WB-9	CH3 INPUT CONT
WB-10	CH3 REPRO CONT
WB-11	CH3 REPRO LED
WB-12	CH3 SEL/REP LED
WB-13	CH3 INPUT LED
WB-14	CH3 REC
WB-15	CH3 REC CONT
WB-16	CH3 REC LED

YB-1	CH8 REC LED
YB-2	CH8 REC CONT
YB-3	CH8 REC
YB-4	CH8 INPUT LED
YB-5	CH8 SEL/REP LED
YB-6	CH8 REPRO LED
YB-7	CH8 REPRO CONT
YB-8	CH8 INPUT CONT
YB-9	
YB-10	
YB-11	
YB-12	CH8 REPRO
YB-13	CH8 INPUT
YB-14	CH7 REPRO
YB-15	CH7 INPUT
YB-16	CH6 INPUT
YB-17	CH6 REPRO
YB-18	CH5 INPUT
YB-19	CH5 REPRO
YB-20	
YB-21	
YB-22	
YB-23	CH7 INPUT CONT
YB-24	CH7 REPRO CONT
YB-25	CH7 REPRO LED
YB-26	CH7 SEL/REP LED
YB-27	CH7 INPUT LED
YB-28	CH7 REC
YB-29	CH7 REC CONT
YB-30	CH7 REC LED

XB-1	CH6 REC LED
XB-2	CH6 REC CONT
XB-3	CH6 REC
XB-4	CH6 INPUT LED
XB-5	CH6 SEL/REP LED
XB-6	CH6 REPRO LED
XB-7	CH6 REPRO CONT
XB-8	CH6 INPUT CONT
XB-9	CH5 INPUT CONT
XB-10	CH5 REPRO CONT
XB-11	CH5 REPRO LED
XB-12	CH5 SEL/REP LED
XB-13	CH5 INPUT LED
XB-14	CH5 REC
XB-15	CH5 REC CONT
XB-16	CH5 REC LED

YA-1	CH8 REC LED
YA-2	CH8 REC CONT
YA-3	CH8 REC
YA-4	CH8 INPUT LED
YA-5	CH8 SEL/REP LED
YA-6	CH8 REPRO LED
YA-7	CH8 REPRO CONT
YA-8	CH8 INPUT CONT
YA-9	
YA-10	
YA-11	
YA-12	CH8 REPRO
YA-13	CH8 INPUT
YA-14	CH7 REPRO
YA-15	CH7 INPUT
YA-16	CH6 INPUT
YA-17	CH6 REPRO
YA-18	CH5 INPUT
YA-19	CH5 REPRO
YA-20	
YA-21	
YA-22	
YA-23	CH7 INPUT CONT
YA-24	CH7 REPRO CONT
YA-25	CH7 REPRO LED
YA-26	CH7 SEL/REP LED
YA-27	CH7 INPUT LED
YA-28	CH7 REC
YA-29	CH7 REC CONT
YA-30	CH7 REC LED

XA-1	CH6 REC LED
XA-2	CH6 REC CONT
XA-3	CH6 REC
XA-4	CH6 INPUT LED
XA-5	CH6 SEL/REP LED
XA-6	CH6 REPRO LED
XA-7	CH6 REPRO CONT
XA-8	CH6 INPUT CONT
XA-9	CH5 INPUT CONT
XA-10	CH5 REPRO CONT
XA-11	CH5 REPRO LED
XA-12	CH5 SEL/REP LED
XA-13	CH5 INPUT LED
XA-14	CH5 REC
XA-15	CH5 REC CONT
XA-16	CH5 REC LED

元 図	生産図	取説図	TYPE
2-3417	3-6190	3-6372	

NOTES : UNLESS OTHERWISE SPECIFIED
1. RESISTANCE VALUES ARE IN OHMS, ± W, 5%.
2. CAPACITANCE VALUES ARE IN FARADS, 50V.
3. CAPACITOR SYMBOL MARKS ARE AS FOLLOWS.
   ⊣⊢ : ALUMINUM ELECTROLYTIC CAPACITOR.
   ⊣⊢ : BIPOLAR ALUMINUM ELECTROLYTIC CAPACITOR.
   ⊣⊢ : MYLAR FILM CAPACITOR (±5%, 50V)
   ⊣⊢ : POLYSTYRENE FILM CAPACITOR (±5%, 50V)
   ⊣⊢ : CERAMIC CAPACITOR.
   ⊣⊢ : MICA CAPACITOR (±5%)
   ⊣⊢ : TANTALUM ELECTROLYTIC CAPACITOR.
   ⊣⊢ : POLYPROPYLENE FILM CAPACITOR (±5%)
   ⊣⊢ : LOW LEAKAGE CURRENT ELECTROLYTIC CAPACITOR.
   ⊣⊢ : METALLIZED PAPER CAPACITOR (±10%)
   ⊣⊢ : SPARK KILLER.
4. ⚠ : SAFETY COMPONENT ; REPLACE ONLY WITH THE SPECIFIED COMPONENT FOR SAFETY REASON.

MRK	REV No.	DATE	DWN	APP
⚠				
⚠				
⚠				
⚠				
⚠				
⚠				
⚠				

DRAWN 90.12.10
DESIGNED 90.12.10
CHECKED
APPROVED

OTARI Otari Electric Co.,Ltd.
NAME CB-110
PART No. CB1100B
DWG No. 3-.6372

MODEL CB-110
3-.6372 SHEET 2

a FREE Download from the Archives of AnalogRules.com

a FREE Download from the Archives of AnalogRules.com

部番	図番	品番	品名	定格	個数	備考

元図	生産図	取説図	TYPE
427851	4-28970	4-28971	

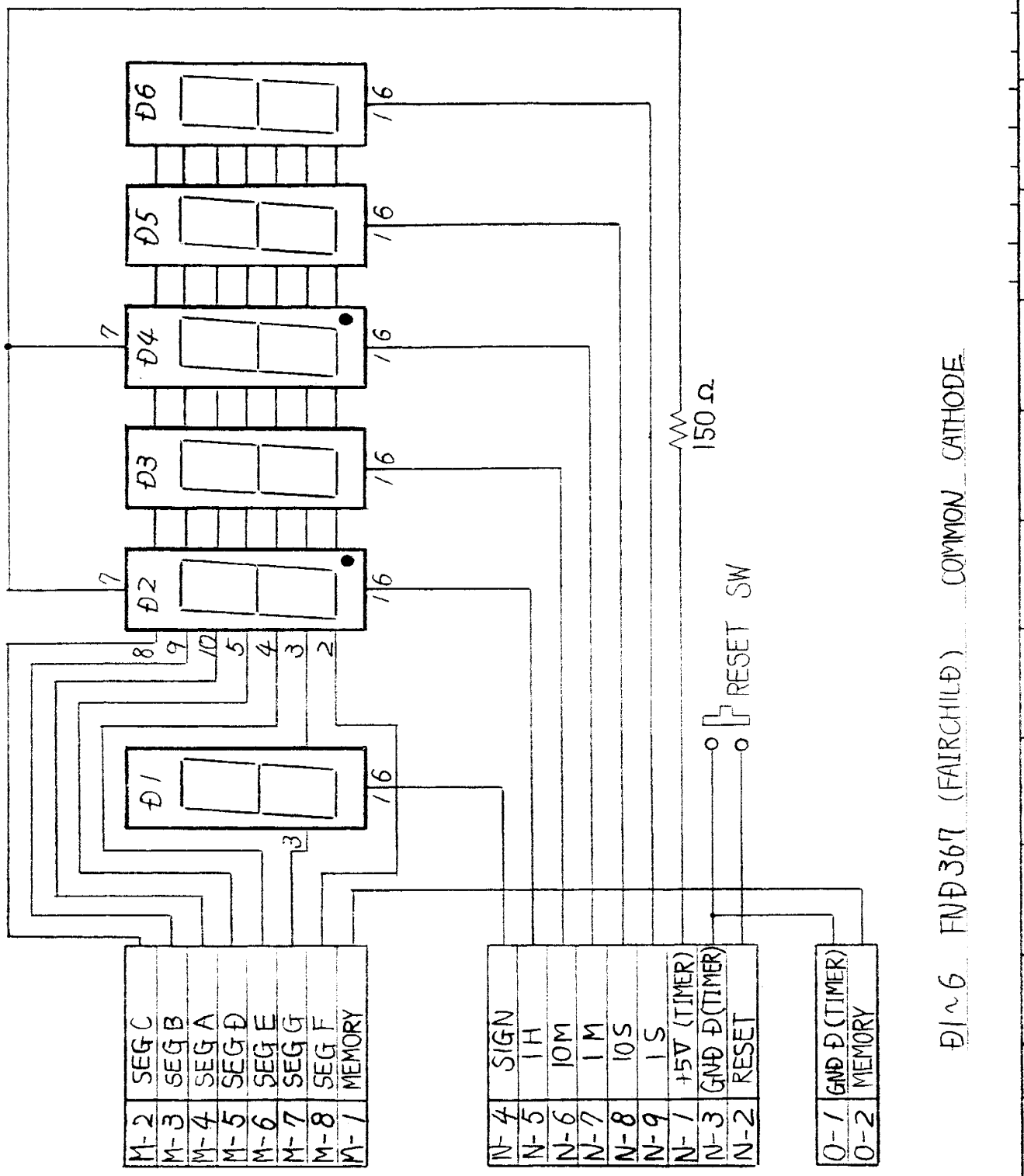

5					材料		
4							
3					仕上	指定以外のエッジはイトメのこと	
2							
1					処理		
記号	改訂番号	年月日	担当	承認	普通寸法差	OS	JIS 一級

承認		検図		設計	80.11.11	製図	11	尺度 ∞

第三角法 単位 mm

DTARI 小谷電機株式会社

形式	
品名	TAPE TIMER P.C.B Assy
図名	CIRCUIT DIAGRAM
品番	PB82W0A

図番 4-28971

a FREE Download from the Archives of AnalogRules.com

a FREE Download from the Archives of AnalogRules.com

元	図	取	説	図	TYPE
2-3415	3-6191	3-6373			

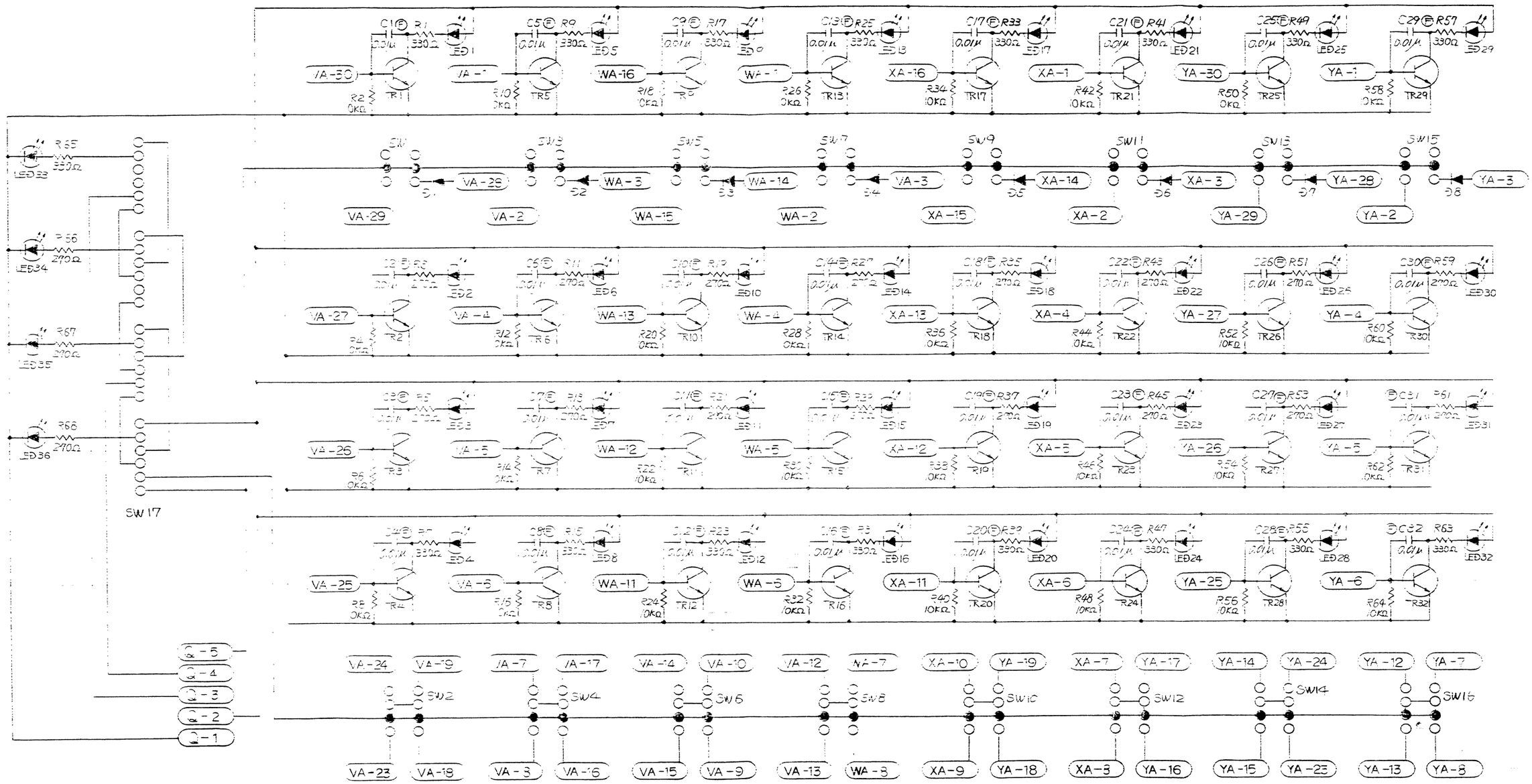

LED NUMBER	OTARI NUMBER	DISCRIPTION
1 5 9 13 17 21 25 29	PN TLR124	TLR 124
2 6 10 14 18 22 26 30	PN TLY124	TLY 124
3 7 11 13 19 23 27 31	PN TLG124	TLG 124
4 8 12 14 20 24 28 32	PN TLO124	TLO 124

SWITCH NUMBER	OTARI NUMBER	DISCRIPTION
1 3 5 7 9 11 13 15	WH42033	LB(C)-22M-12K
2 4 6 8 10 12 14 16	WH42034	LB(C)-23M-12K
7	WH12108	SUT-41A

TRANSISTOR NUMBER	OTARI NUMBER	DISCRIPTION
TR1 ~ 32	QC 685R	2SC1685R

DIODE NUMBER	OTARI NUMBER	DISCRIPTION
D1 ~ 8	PN1S1588	1S 1558

NOTES : UNLESS OTHERWISE SPECIFIED
1. RESISTANCE VALUES ARE IN OHMS, ¼ W, 5%.
2. CAPACITANCE VALUES ARE IN FARADS, 50V.
3. CAPACITOR SYMBOL MARKS ARE AS FOLLOWS.
- ALUMINUM ELECTROLYTIC CAPACITOR
- B : BIPOLAR ALUMINUM ELECTROLYTIC CAPACITOR.
- F : MYLAR FILM CAPACITOR (±5%, 50V)
- S : POLYSTYRENE FILM CAPACITOR (±5%, 50V)
- C : CERAMIC CAPACITOR.
- M : MICA CAPACITOR (±5%)
- T : TANTALUM ELECTROLYTIC CAPACITOR.
- P : POLYPROPYLENE FILM CAPACITOR (±5%)
- L : LOW LEAKAGE CURRENT ELECTROLYTIC CAPACITOR.
- F : METALLIZED PAPER CAPACITOR (±10%)
- SPARK KILLER.
4 : SAFETY COMPONENT . REPLACE ONLY WITH THE SPECIFIED COMPONENT FOR SAFETY REASON.

MRK	REV. No.	DATE	DWN	APP
7				
6				
5				
4				
3				
2				
1				

DRAWN 80.12.10
DESIGNED 80.12.10
CHECKED
APPROVED

OTARI Otari Electric Co.,Ltd.

NAME MODE PCB Assy

PART No. PB45K0A

DWG No. 3 . . 6373

MODEL CB-110

DWG No. 3 . . 6373

a FREE Download from the Archives of AnalogRules.com

a FREE Download from the Archives of AnalogRules.com

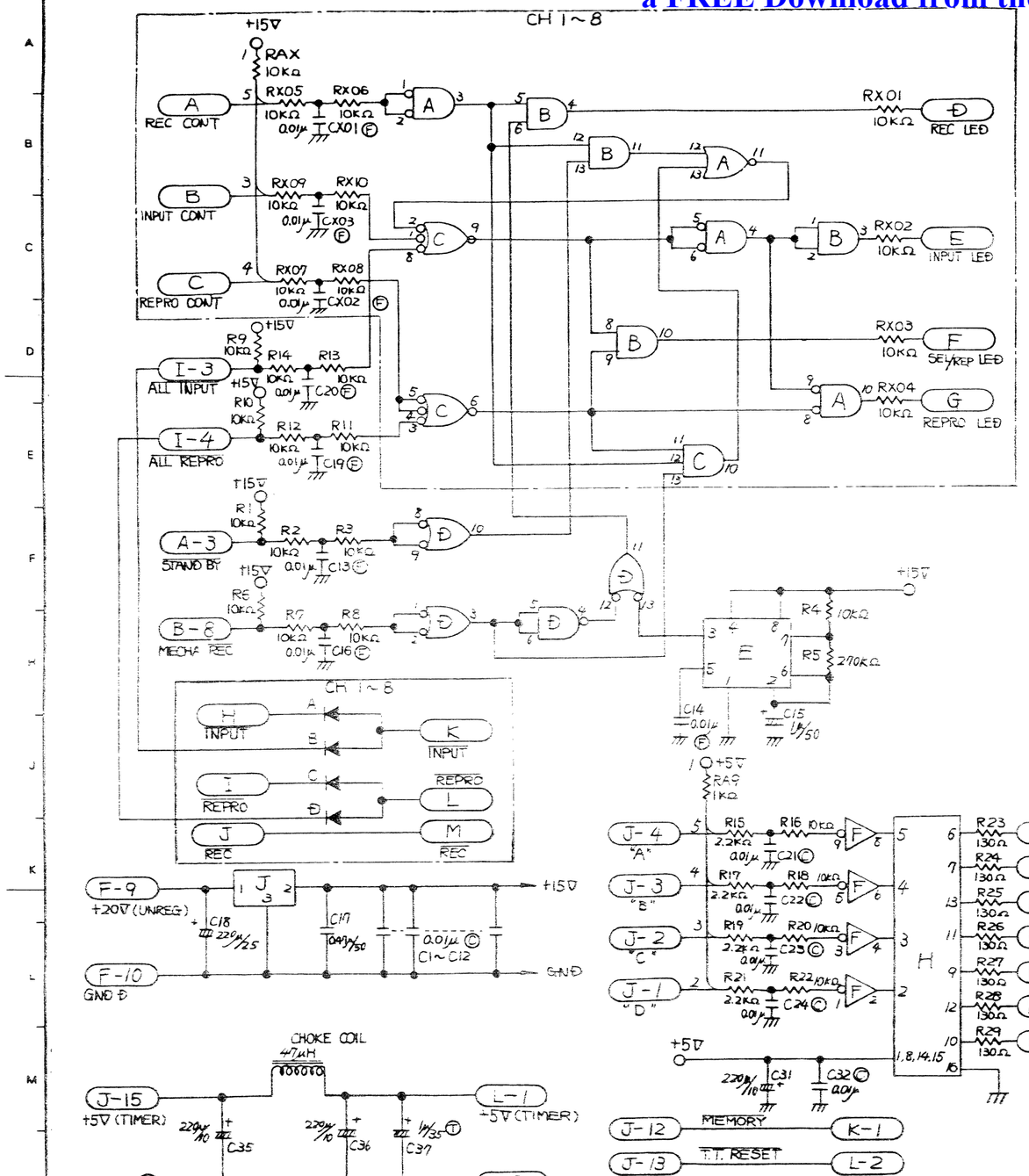

	CONNECTOR NUMBER												
	A	B	C	D	E	F	G	H	I	J	K	L	M
CH 1	VB-29	VB-23	VB-24	VB-30	VB-27	VB-26	VB-25	VB-18	VB-19	VB-28	G-4	G-3	G-2
CH 2	VB-2	VB-8	VB-7	VB-1	VB-4	VB-5	VB-6	VB-16	VB-17	VB-3	F-1	G-5	F-4
CH 3	WB-15	WB-9	WB-10	WB-16	WB-13	WB-12	WB-11	VB-15	VB-14	WB-14	F-2	F-3	F-5
CH 4	WB-2	WB-8	WB-7	WB-1	WB-4	WB-5	WB-6	VB-13	VB-12	WB-3	F-7	F-8	F-6
CH 5	XB-15	XB-9	XB-10	XB-16	XB-13	XB-12	XB-11	YB-18	YB-19	XB-14	A-7	A-6	A-1
CH 6	XB-2	XB-8	XB-7	XB-1	XB-4	XB-5	XB-6	YB-16	YB-17	XB-3	A-10	A-9	A-2
CH 7	YB-29	YB-23	YB-24	YB-30	YB-27	YB-26	YB-25	YB-15	YB-14	YB-28	A-11	A-12	A-4
CH 8	YB-2	YB-8	YB-7	YB-1	YB-4	YB-5	YB-6	YB-13	YB-12	YB-3	A-13	A-14	A-15

	I C NUMBER		
	A	B	C
CH 1	IC12	IC13	IC11
CH 2	IC22	IC23	IC21
CH 3	IC32	IC33	IC31
CH 4	IC42	IC43	IC41
CH 5	IC52	IC53	IC51
CH 6	IC62	IC63	IC61
CH 7	IC72	IC73	IC71
CH 8	IC82	IC83	IC81

IC NUMBER	OTARI NUMBER	DISCRIPTION
A	IMC 14001	MC14001B
B	IMC 14081	MC14081B
C	IMC 14073	MC14073B

IC NUMBER		OTARI NUMBER	DISCRIPTION
D	IC 1	IMC 14001	MC14001B
E	IC 2	IRC555DB	RC555DB
F	IC 3	IMC 14584	MC14584B
G	IC 4	IMC 14584	MC14584B
H	IC 5	IMSM561	MSM561RS
I	IC 6	ITD62301	TD62301P
J	IC 7	IHC 7815	μPC7815

	DIODE NUMBER			
	A	B	C	D
CH 1	D-29	D-30	D-31	D-32
CH 2	D-25	D-26	D-27	D-28
CH 3	D-23	D-24	D-21	D-22
CH 4	D-19	D-20	D-17	D-18
CH 5	D-13	D-14	D-15	D-16
CH 6	D-9	D-10	D-11	D-12
CH 7	D-7	D-8	D-5	D-6
CH 8	D-3	D-4	D-1	D-2

DIODE NUMBER	OTARI NUMBER	DISCRIPTION
A.B.C.D	PNIS1558	IS1558

元図	生産図	取説図	TYPE
2-3416	3-6192	3-6374	

NOTES: X → CH 1~8

NOTES : UNLESS OTHERWISE SPECIFIED

1. RESISTANCE VALUES ARE IN OHMS, ± W, 5%.
2. CAPACITANCE VALUES ARE IN FARADS, 50V.
3. CAPACITOR SYMBOL MARKS ARE AS FOLLOWS.
   - ALUMINUM ELECTROLYTIC CAPACITOR.
   - BIPOLAR ALUMINUM ELECTROLYTIC CAPACITOR.
   - MYLAR FILM CAPACITOR (±5%, 50V)
   - POLYSTYRENE FILM CAPACITOR (±5%, 50V)
   - CERAMIC CAPACITOR.
   - MICA CAPACITOR (±5%)
   - TANTALUM ELECTROLYTIC CAPACITOR.
   - POLYPROPYLENE FILM CAPACITOR (±5%)
   - LOW LEAKAGE CURRENT ELECTROLYTIC CAPACITOR.
   - METALLIZED PAPER CAPACITOR (±10%)
   - SPARK KILLER
4. ⚠ : SAFETY COMPONENT ; REPLACE ONLY WITH THE SPECIFIED COMPONENT FOR SAFETY REASON.

MARK	REV. No.	DATE	DWN	APP
⚠				
⚠				
⚠				
⚠				
⚠				
⚠				
⚠				

DRAWN 80.12.10
DESIGNED 80.12.10
CHECKED
APPROVED

OTARI Otari Electric Co.,Ltd.

NAME CONTROL P.C.B Assy

PART No. PB45L0A

DWG No. 3 -.6374

MODEL CB-110

DWG No 3.6374

a FREE Download from the Archives of AnalogRules.com

a FREE Download from the Archives of AnalogRules.com

部番	図番	品番	品名，定格	個数	備考

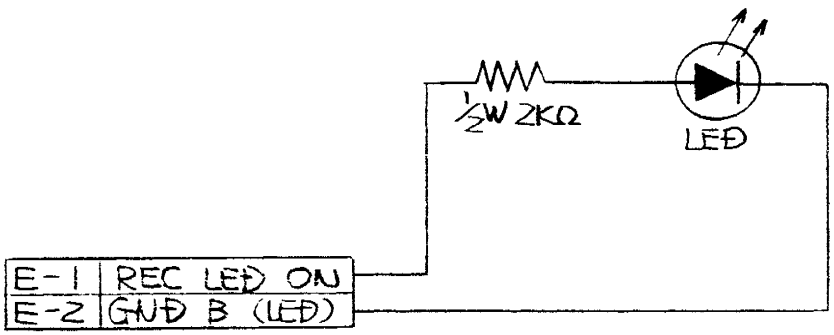

LED	
OTARI NUMBER	DISCRIPTION
PNTLR124	TLR 124 (RED)

元図	生産図	取説図	TYPE
4-28864	4-28968	4-28969	

5					材料		OTARI 小谷電機株式会社	
4					仕上	指定以外のエッジはイトメのこと	形式	
3								
2					処理		品名	REC LED P.C.B Assy
1					普通寸法差	OS JIS 一級	図名	CIRCUIT DIAGRAM
記号	改訂番号	年月日	担当	承認				
承認		検図 イシイ '81.4.9	設計	80.10.30	製図	尺度	第三角法 単位	品番 PB76P0A

図番 4.28969

02-37. 10-80-5,000

a FREE Download from the Archives of AnalogRules.com

a FREE Download from the Archives of AnalogRules.com

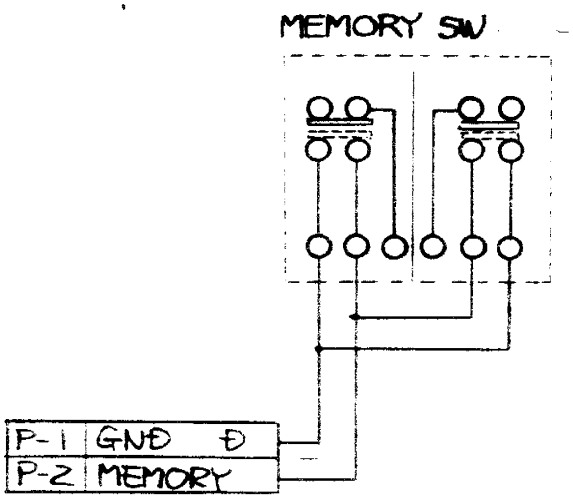

MEMORY SW	
OTARI NUMBER	DISCRIPTION
WH12109	SUT ミリーズ

元図	生産図	取説図	TYPE
4-28999	4-28865	4-29000	

5					材料		OTARI 小谷電機株式会社	
4					仕上	指定以外のエッジはイトメのこと	形式	
3								
2					処理		品名	MEMORY SW P.C.B Assy
1								
記号	改訂番号	年月日	担当	承認	普通寸法	OS JIS 一級	図名	CIRCUIT DIAGRAM
承認		検図 イシイ 21.4.9	設計	80.10.30	製図	尺度	第三角法	品番 PB76W0A

4.29000

a FREE Download from the Archives of AnalogRules.com