MTL 346 Signal Flow

Revised by Patrick 9.26.2018
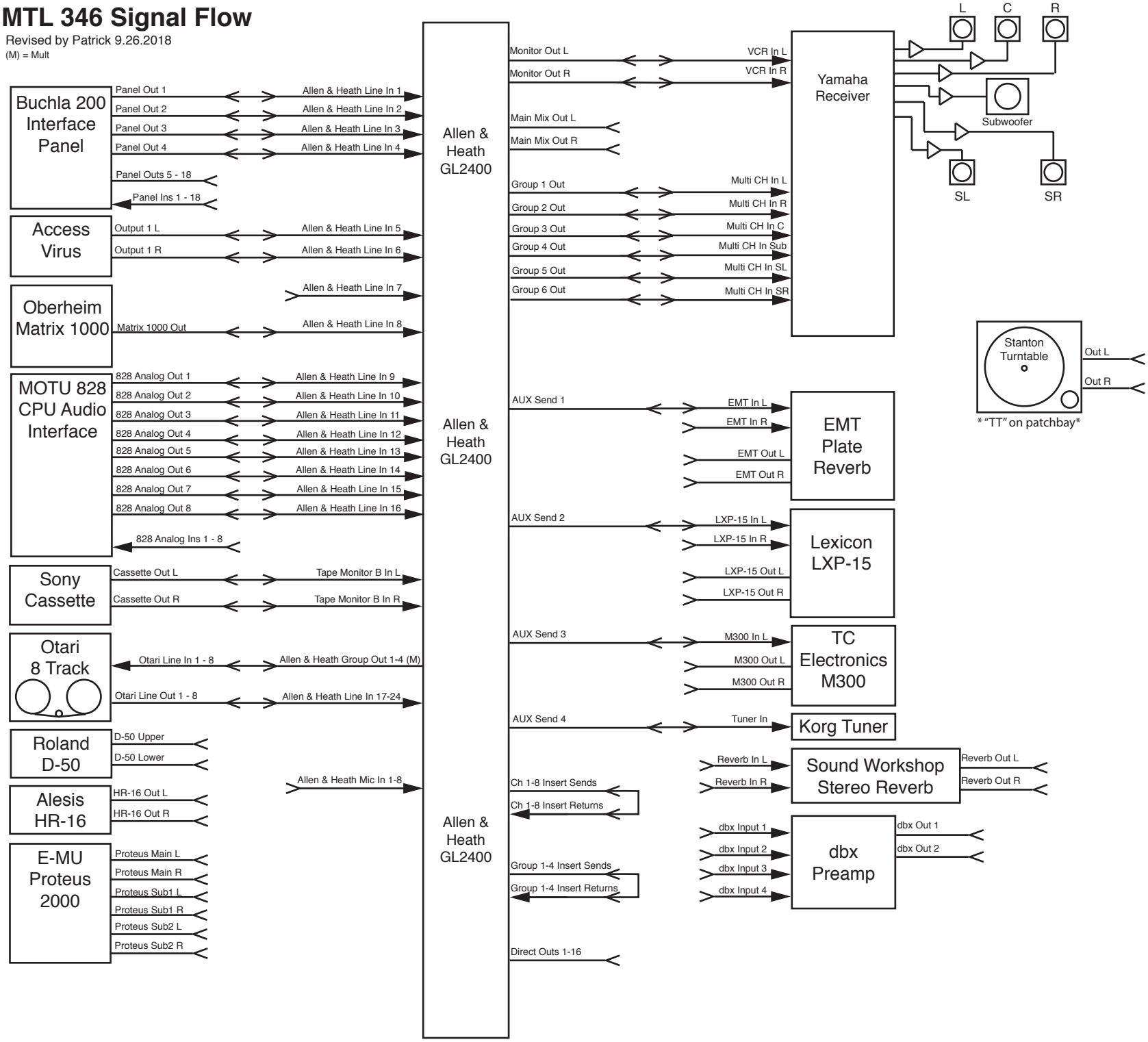
(M) = Mult